APPLICATION CUSTOMER STORY:

Virtumed LLC Designs

Switching from Molding and Machining to FDM Saves 65% on Cost of MRI Coil Components

"FDM helps us by delivering better coils in less time at a lower cost."
– Brandon Tramm, Mechanical Engineer, Virtumed

SITUATION

Virtumed LLC designs, builds and repairs components for magnetic resonance imaging (MRI) machines. It specializes in producing MRI coils for research and high-strength magnetic field machines in order quantities of one to five. The coil is the sub-assembly that is placed near the part of the body to be imaged. It emits a radio frequency signal that hydrogen protons absorb, which causes them to move to a higher energy state. When the signal is turned off, the coil detects the release of energy by the protons. Computers process the signal to produce a detailed, internal image of the patient's body.

Coils typically require several dozen plastic components that have complex geometries.

HOW DOES FDM COMPARE TO TRADITIONAL METHODS FOR VIRTUMED LLC DESIGNS?

METHOD	PRODUCTION TIME	COST
Metal Mold*	56 days	$52,725
PolyJet Mold	2 days	$1,318
SAVINGS	54 days (96%)	$51,407 (98%)

*Production Mode

APPLICATION CUSTOMER STORY:

Virtumed LLC Designs

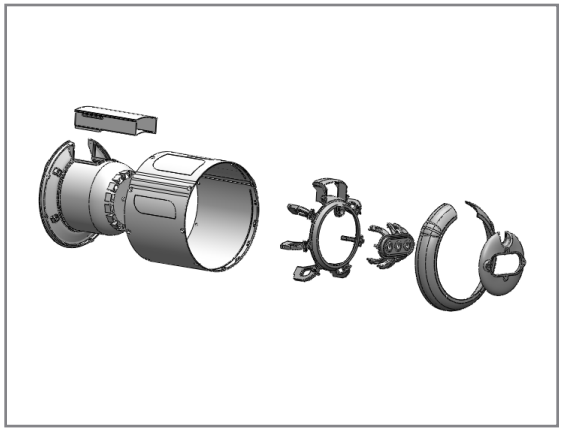

CAD drawing of coil. an MRI head coil's plastic components.

In the past, the company used several methods to produce these components. Smaller parts and parts with relatively simple geometries were machined from plastic. Larger and more complex parts were generally produced by silicone rubber molding. When used to make a head coil, this combination of manufacturing methods had a cost $20,900 and a delivery lead time of four months.

"We were interested in using rapid prototyping methods to improve our design process and reduce our manufacturing costs and lead time," said Brandon Tramm, mechanical engineer for Virtumed LLC. "But at the time we started, rapid prototyping materials had not been qualified for use within the intense magnetic field of an MRI machine."

SOLUTION

Tramm supervised the testing of Fused Deposition Modeling (FDM) materials for the most important MRI material certifications. An MRI coil material needs to have low proton signal strength to avoid interfering with the MRI image. It also needs to have a low magnetic field distortion to avoid interfering with the magnets that align the protons in the body. Finally, it requires high radio frequency dielectric strength to safely insulate the patient from electrical shock.

Tramm concluded that FDM polycarbonate (PC), PC-ISO (a PC that meets the International Standards Organization (ISO) 10993-1 and United States Pharmacopeia (USP) Class VI classification) and polyphenylsulfone (PPSF) are suitable materials for construction of end-use parts in a 3-Tesla MRI scanner. "Selection of the right material for a particular application depends upon the specific properties required," Tramm said. "But in nearly every case at least one FDM material has the right properties."

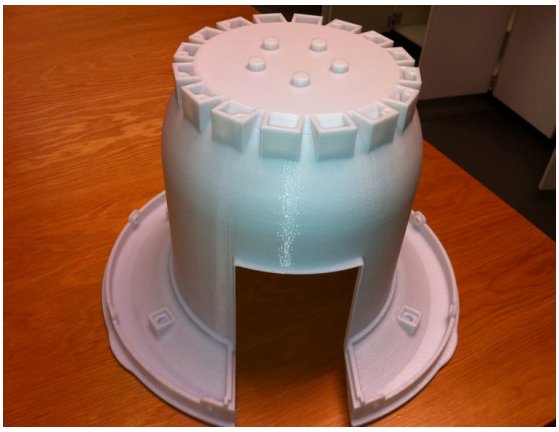

FDM coil inner liner.

APPLICATION CUSTOMER STORY:

Virtumed LLC Designs

RESULTS

Virtumed LLC now uses FDM to produce the plastic parts for nearly of all of its prototype and production coils. “FDM simplifies the design process by eliminating the constraints of machining and molding,” Tramm said. “I can design the ideal geometry for the application without worrying about whether it can be molded or machined. This approach reduces engineering time and usually makes it possible to reduce the number of parts in the coil, which saves on assembly time and maintenance costs.”

Tramm also noted the dramatic savings in production costs and lead time when producing coils without molding and machining. When using FDM, the head coil cost drops by 78% to just $4,688, and delivery time falls 95% to one week. These prices and lead times are based on purchasing parts from a service bureau and will be even better when Virtumed LLC has the volume to justify the purchase of its own FDM machine. “FDM helps us serve our customers better by delivering better coils in less time at a lower cost,” Tramm concluded.

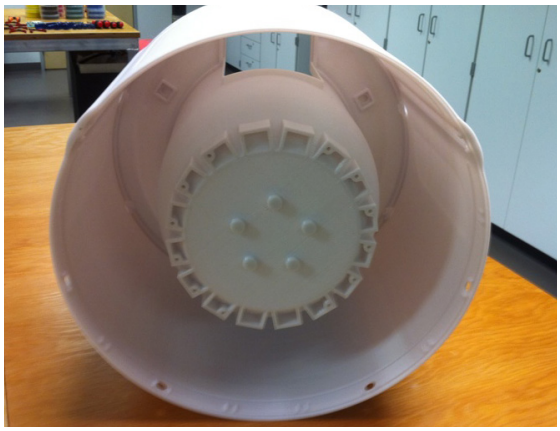

FDM inner and outer liners assembled together.

Partially assembled coil with electronics.

info@stratasys.com

STRATASYS.COM

HEADQUARTERS
7665 Commerce Way, Eden Prairie, MN 55344
+1 888 480 3548 (US Toll Free)
+1 952 937 3000 (Intl)
+1 952 937 0070 (Fax)

2 Holtzman St., Science Park, PO Box 2496
Rehovot 76124, Israel
+972 74 745-4000
+972 74 745-5000 (Fax)

THE **3D PRINTING SOLUTIONS** COMPANY™

ISO 9001:2008 Certified
© 2015 Stratasys Ltd. All rights reserved. Stratasys, FDM and Fortus are registered trademarks and Fused Deposition Modeling, FDM Technology, Fortus 250mc, Fortus 360mc, Fortus 400mc, Fortus 900mc, Insight and Control Center are trademarks of Stratasys Inc., registered in the United States and other countries. ULTEM™ is a registered trademark of SABIC or affiliates. All other trademarks are the property of their respective owners. Product specifications subject to change without notice. Printed in the USA. ACS_FDM_Virtumed_MRI_EN_1115

The information contained herein is for general reference purposes only and may not be suitable for your situation. As such, Stratasys does not warranty this information. For assistance concerning your specific application, consult a Stratasys application engineer. To ensure user safety, Stratasys recommends reading, understanding, and adhering to the safety and usage directions for all Stratasys and other manufacturers' equipment and products. In addition, when using products like paints, solvents, epoxies, Stratasys recommends that users perform a product test on a sample part or a non-critical area of the final part to determine product suitability and prevent part damage.

For more information about Stratasys systems, materials and applications, call 888.480.3548 or visit www.stratasys.com